FULL DECK'S

Hemanth Harun Nishita Balaji Jubesh

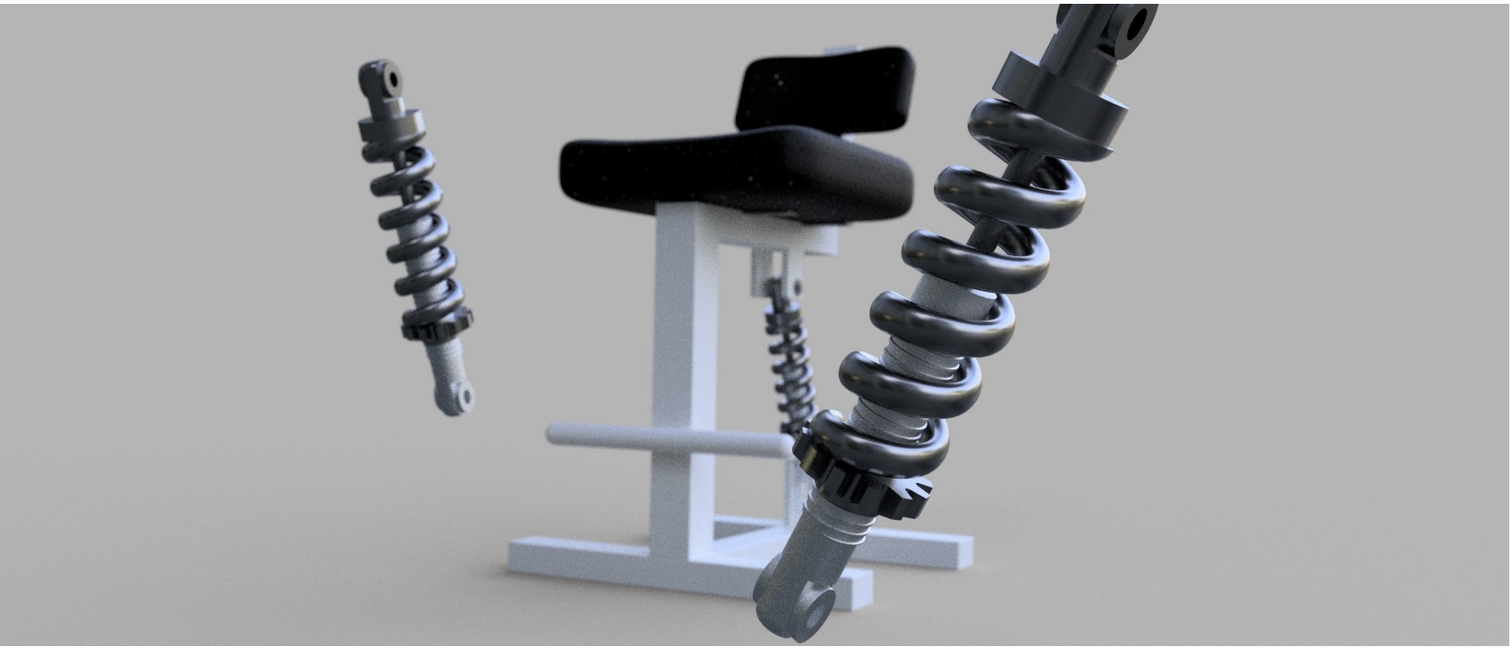

WHERE

The classroom

The classroom we selected to identify the problems was **MMCR** of IISc Bangalore.

WHY

The Problem

Hanging legs
Uncomfortable backrest
Stuck for hours!
Boring looks
“Can’t clean” spots

No Bag placement
Accumulates dust
Too heavy
Hard to move
Expensive=comfort

Not stackable
No ventilation
Postural limitations
Long term ergo issues
Handling the abuse

ISQ

Information about system to be

improved

Name	Classroom seating solution	
Primary Function	To comfortably seat students for longer hours	
Structure	Base to sit Back rest Arm rests Support	
System environment	How it (should) interacts with super system of which it is part	Exists and is moved around
	With any other system with which it interacts, or in proximity	AC, Carpet, Flooring, Other furniture
	Natural system surrounding it	Indoor, Air, sunlight, humidity, temperature, moisture, water, Food, Human

Available resources

Substance: Materials	Wood, Aluminum, Plastic, Fabric, glass, Polycarbonate
Field: Energy/actions	Electricity, Heat, Air, Water Standing, Sitting, Walking, Talking, Writing, Push-Pull, Lift
Functional	Sit/Squat on floor

Information about the problem situation

Drawbacks to eliminate / desired improvements	Insufficient ventilation Inflexible back support Not comfortable Congestion Sitting height is not ideal Feeling sleepy Does not accommodate different postures Difficult to maintain
Mechanism causing the drawback to occur, if clear Constraints caused due to human limitations	Structure and material of cushion Back rest not adaptable Not considering human factors Arm rest and seating does not accommodate different postures Unreachable nooks and creases
History of problem development	Sitting on floors Benches- wooden, metal Foldable benches Writing desk Chair
Other problem to be solved: modify or direction of development?	Cost Resource usage

Changing the system

Allowable changes	Cushioning can be removed/ changed Armrest and everything
Limitations to change the system	Cannot change classroom or students Directionality of lecture w.r.t chair cannot be controlled We cannot restrict usage and behaviors' of the user

WHAT

The Requirements

Comfort

- Sitting height
- No.of Supports
- Material properties
- No.of postures
- Force required to move

Durability

- Life span

Aesthetics

- Likes/Dislikes
- Stacking

Stability

- Load capacity
- Toppling angle

Maintenance

- Nooks and corners
- Time to clean

Cost

- Price /unit vs cost

FUNCTION

Find a Chair

Pull the chair

Sit on it

Place the bag

Move around to talk

Position chair for lecture

Listen

Take out things from bag

Take notes

Pack the bag

Leave

1. **Stability**
2. **Height adjustment**
3. **Movement**
4. **Stacking**
5. **Aesthetics**

Stability	I-section beam	Truss-like structure	Round base		
Height adjustment	Telescopic handles	Push pin	Foot rest	Slider grooves	
Movement	Cycle pedals	Wheels	Spring	None	Seat joint with balls
Stacking	Z-Profile	Origami	Puzzle	None	

MORPHOLOGY

The Concepts

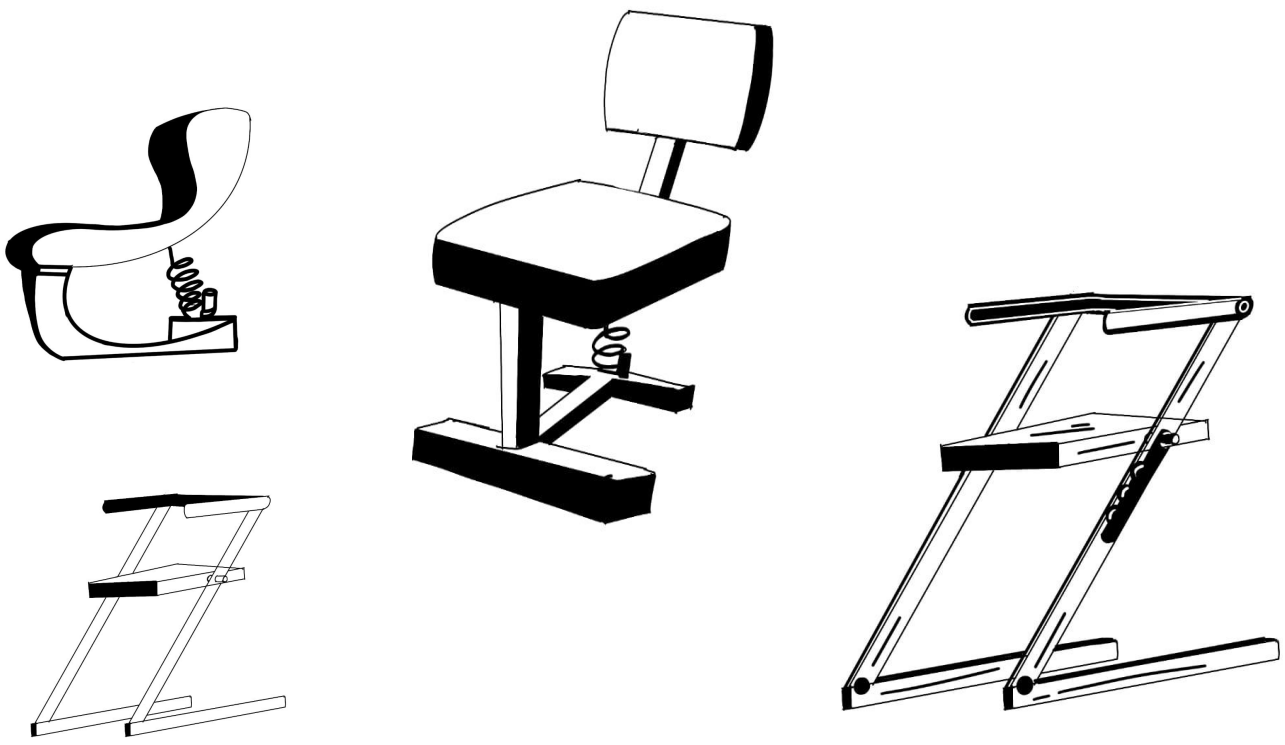

SNDS

The Problem

Develop an aesthetic and inclusive seating solution for the classroom, that promotes active sitting and reduces sedentary behaviour, with appropriate stability for the classroom environment.

CONSIDERATIONS

Against,
Postural fixation
Thigh-roll effect
Balancing problem

For,
Healthy lifestyle
Comfortable posture
Aesthetic space

Dimensions referred from “Indian Anthropometric dimensions”

“Next posture is best posture”

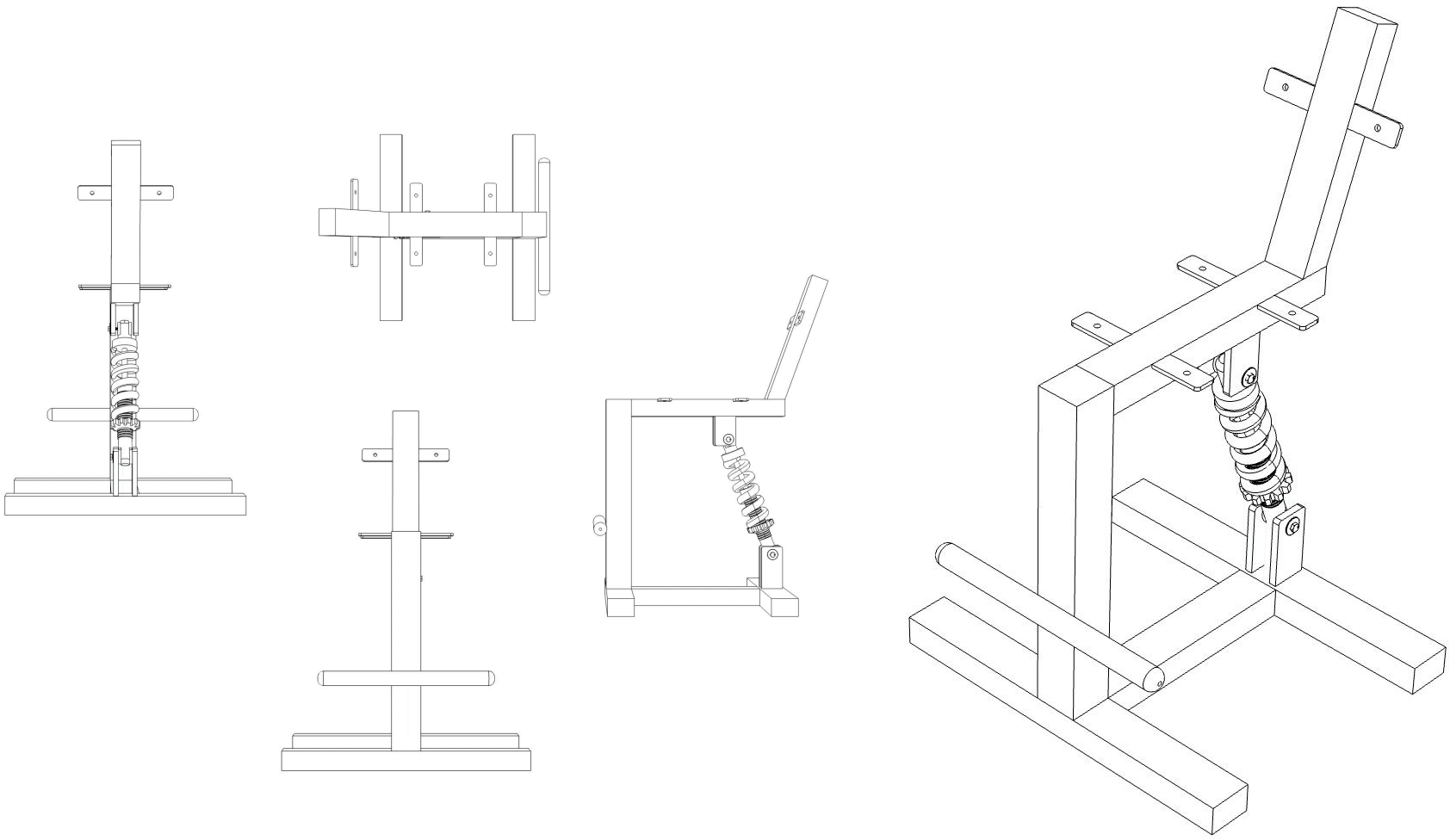

BOM

60 × 40 pipe, 14 gauge	INR 1200/20’
40 × 40 pipe, 16 gauge	INR 250/kg
1” round, mild steel CR	INR 150
1” bolts (6) 3” bolt (2)	INR 60
5mm Cushion	INR 550
Synthetic leather	INR 375/1.5m
Acrylic spray Paint	INR 300
12mm Plywood 3’ x 2’	INR 110/sft
Labor charges	INR 1200
Welding	INR 200
Shock absorber	INR 1650

INR 5345

THE END